e2v

e2v technologies

CCD60 Back Illuminated Peltier Pack Electron Multiplying CCD Sensor

INTRODUCTION

The CCD60 is part of the new L3Vision™ range of products from e2v technologies. This device uses a novel output amplifier circuit that is capable of operating at an equivalent output noise of less than one electron at frame rates of 1 kHz.

The sensor is a frame transfer device, designed for high frame rate applications such as wavefront sensing or adaptive optics. The device operates in inverted mode to suppress dark current.

The e2v technologies back-thinning process ensures high quantum efficiency over a wide range of wavelengths.

The device functions by converting photons to charge in the image area during the integration time period, then transferring this charge through the image and store sections into the readout register. Following transfer through the readout register, the charge is multiplied in the gain register prior to conversion to a voltage by a low noise output amplifier.

The multiplication gain may be varied by adjustment of the multiplication phase amplitude R∅2HV.

GENERAL DATA

Active image area	3.072 x 3.072 mm
Image section active pixels	128 (H) x 128 (V)
Image pixel size	24 x 24 µm
Number of output amplifiers	1
Fill factor	100%

PACKAGE DETAILS (Nominal, see Fig. 14)

Peltier Cooled Package

Overall dimensions	34.2 x 30.48 mm
Number of pins	32
Inter-pin spacing	1.778 mm
Opposite row spacing	30.48 mm
Window material	sapphire
Mounting position	any

Pin 1 is identified as shown in Fig. 14.

STORAGE AND OPERATION TEMPERATURE EXTREMES

	MIN	MAX
Storage temperature (°C)	−55	+125
Operating temperature (°C)	−55	+60
Temperature ramping (°C/min)	-	5

Users wishing to operate the device outside this range are advised to consult e2v technologies.

e2v technologies limited, Waterhouse Lane, Chelmsford, Essex CM1 2QU England Telephone: +44 (0)1245 493493 Facsimile: +44 (0)1245 492492
e-mail: enquiries@e2vtechnologies.com Internet: www.e2vtechnologies.com Holding Company: e2v holdings limited

e2v technologies inc. 4 Westchester Plaza, PO Box 1482, Elmsford, NY10523-1482 USA Telephone: (914) 592-6050 Facsimile: (914) 592-5148
e-mail: enquiries@e2vtechnologies.us

© e2v technologies limited 2004

TYPICAL PERFORMANCE SPECIFICATIONS

The following are for operation of devices at 500 Hz frame rate and at typical operating voltages. Parameters are given at 293 K unless specified otherwise. Where parameters are different in the normal and high gain mode, both are given.

PARAMETER	UNIT	MIN	TYPICAL	MAX
Output amplifier responsivity (normal mode) (see note 1)	$\mu V/e^-$	-	1.2	-
Multiplication register gain (see notes 2 and 3)		1	-	1000
Peak signal - non-inverted mode operation (see note 4)	e^-/pixel	-	530k	-
Peak signal - inverted mode operation	e^-/pixel	-	240k	-
Charge handling capacity of multiplication register (see note 5)	e^-/pixel	-	800k	-
Readout noise at 11 MHz (normal mode) (see note 6)	e^- rms	-	100	-
Readout noise at 11 MHz (high gain mode)	e^- rms	-	<1	-
Integrated dark signal at 293 K (see note 7)	e^-/pixel/s	-	900	-
Integrated dark signal non-uniformity (DSNU) at 293 K (see notes 7 and 8)	e^-/pixel/s	-	340	-
Excess noise factor (see note 9)		-	$\sqrt{2}$	-
Maximum readout frequency (settling to 1%) (see notes 4 and 10)	MHz	-	11	18
Maximum parallel transfer frequency	MHz	-	10	-

NOTES

1. Measured at a pixel rate of 1 MHz.
2. The typical variation of gain with R∅2HV at different temperatures is shown in Fig. 1.
3. Some increase of R∅2HV may be required throughout life to maintain gain performance. Adjustment of R∅2HV should be limited to the maximum specified under Operating Conditions.
4. These values are predicted from design and not measured.
5. When multiplication gain is used, a linear response of output signal with input signal is achieved for output signals up to typically 400 ke^-.
6. These noise values are dominated by reset noise in the output amplifier and it is assumed that correlated double sampling (CDS) is not being implemented. If CDS is used to suppress the reset component, a noise of 10 e^- can typically be achieved at a pixel rate of 1 MHz with a noise floor of 4 e^- rms. At 11 MHz the noise with CDS is about 35 e^-. These values are inferred by design and not measured.
7. The quoted dark signal has the usual temperature dependence for inverted mode operation. For operation at high frame rates with short integration times, the dark signal will be dominated by an additional component generated during readout. Operating at a temperature of 293 K and 500 Hz frame rate, the readout component contributes typically 3.6 e^-/pixel/frame at a gain of 1000 and referred to the image area, and has a temperature dependence consistent with non-inverted mode operation. There exists a further weakly temperature dependent component, the clock induced charge, which is independent of the integration time and is a function of the operating biases and timings employed. For more information, refer to the e2v technologies technical note: "Dark Signal and Clock-Induced Charge in L3Vision™ CCD Sensors".
8. DSNU is defined as the 1σ variation of the dark signal.
9. The excess noise factor is defined as the factor by which the multiplication process increases the shot noise on the image when multiplication gain is used.
10. A maximum readout frequency of 18 MHz is expected to be achievable with a 20 pF load, output settling to 1%, and single sampling.

ORDERING INFORMATION

PART NUMBER	OPERATING MODE	ANTIBLOOMING	COATING	WINDOW
CCD60-00-*-443	2-phase IMO	None	Midband	Permanent

© e2v technologies

DEVICE COSMETIC PERFORMANCE

Grade 1 devices are supplied to the blemish specification shown below.

Note that incorrect biasing of the device may result in spurious dark or white blemishes appearing. These will be eliminated if the biases are adjusted.

Test Conditions

Operating mode	Device run in 2-phase inverted mode at a rate of 500 frames/second.
Sensor temperature	-5 ± 3 °C.
Multiplication gain	Set to approximately 1000.
Illumination	Set to give a signal level of approximately 50 e^-/pixel/frame.

BLEMISH SPECIFICATION

Black Columns Black defects are counted when they have a responsivity of less than 80% of the local mean signal at approximately the specified multiplication gain and level of illumination. A black column contains at least 9 contiguous black defects.

White Columns White defects are pixels having a dark signal generation rate corresponding to an output signal of greater than 5 times the maximum specified dark signal level. A white column contains at least 9 contiguous white defects.

Pin-Head Columns Pin-head columns are manifest as a partial dark column with a bright pixel showing photoresponse at the end of the column nearest to the readout register. Pin-head columns are counted when the black column has a responsivity of less than 80% of the local mean signal at approximately the specified multiplication gain and level of illumination. A pin-head column contains at least 9 black defects.

SPECIFICATION FOR GRADE 1 DEVICES

PARAMETER	SPECIFICATION
White Columns	0
Black Columns	0
Pin-head Columns	0

Figure 1: TYPICAL VARIATION OF MULTIPLICATION GAIN WITH R∅2HV AT DIFFERENT TEMPERATURES

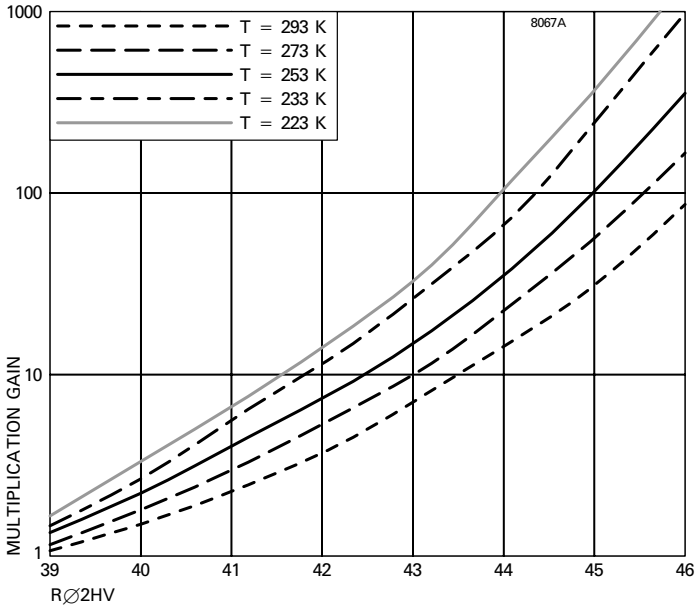

Figure 2: TYPICAL VARIATION OF INTEGRATED DARK SIGNAL WITH TEMPERATURE

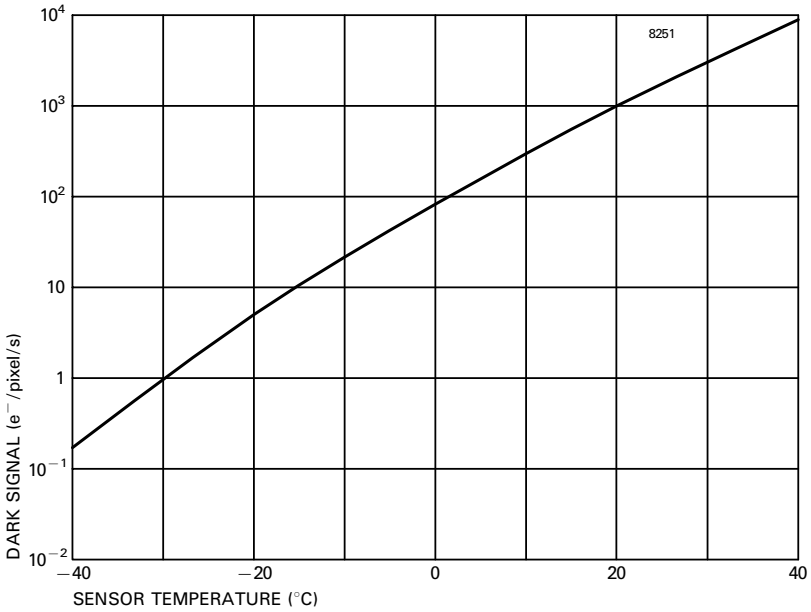

Figure 3: TYPICAL SPECTRAL RESPONSE, MIDBAND COATED (At +20 °C, no window)

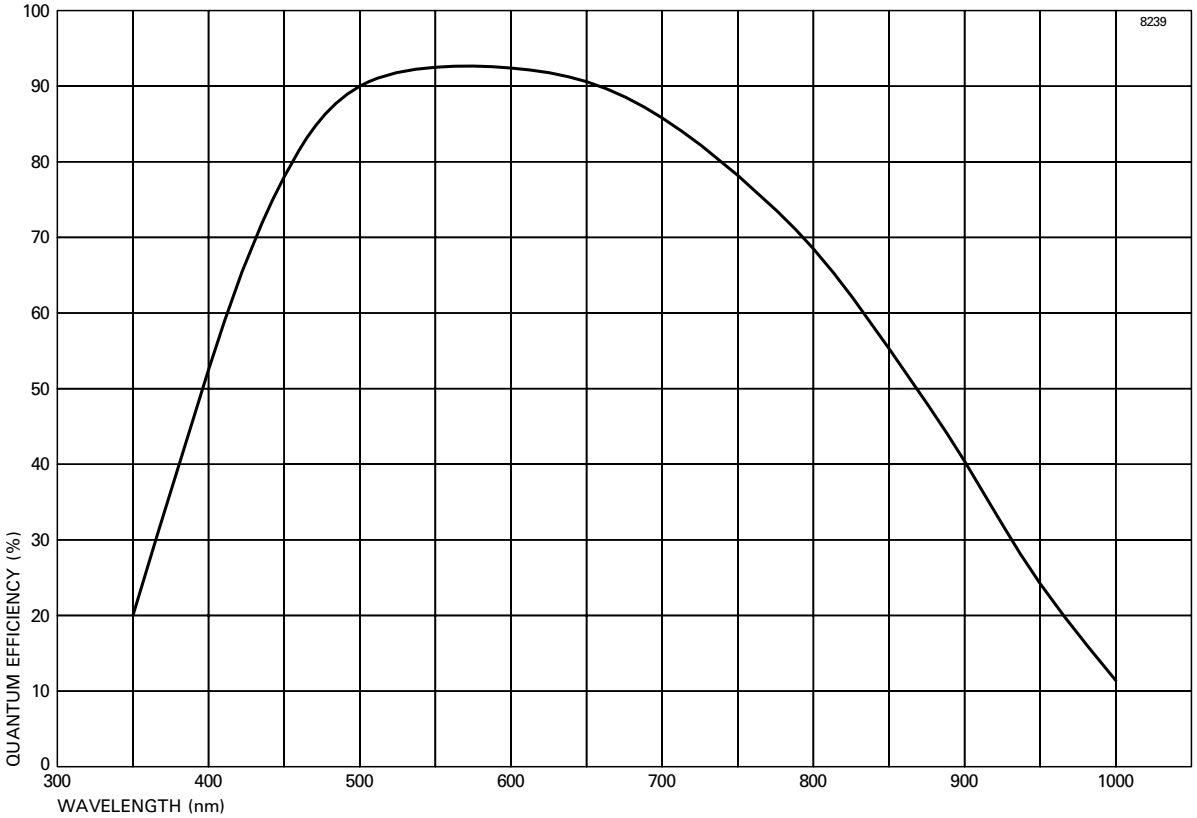

© e2v technologies

ABSOLUTE MAXIMUM RATINGS

Maximum ratings are with respect to SS.

PIN	CONNECTION	MIN (V)	MAX (V)
1	n.c.		
2	S∅2	−20	+20
3	S∅1	−20	+20
4	ABD	−0.3	+28
5	IG	−20	+20
6	I∅1	−20	+20
7	SS	0	
8	Thermistor		
9	Thermistor		
10	∅R	−20	+20
11	SS	0	
12*	OS	−0.3	+25
13	OD	−0.3	+32
14	R∅DC	−20	+20
15	R∅2HV	−20	+50
16	n.c.		
17	n.c.		
18	n.c.		
19	RD	−0.3	+25
20	OG	−20	+20
21	R∅2	−20	+20
22	R∅1	−20	+20
23	R∅3	−20	+20
24	R∅1	−20	+20
25	R∅2	−20	+20
26	DG	−20	+20
27	S∅2	−20	+20
28	S∅1	−20	+20
29	I∅2	−20	+20
30	S∅1	−20	+20
31	n.c.		
32	n.c.		

n.c. = not connected.

* Permanent damage may result if, in operation, OS experiences short-circuit conditions.

Maximum voltages between pairs of pins:

PIN	CONNECTION	PIN	CONNECTION	MIN (V)	MAX (V)
13	OD	12	OS	−15	+15
15	R∅2HV	14	R∅DC	−20	+50
15	R∅2HV	23	R∅3	−20	+50
Output transistor current (mA)					20

OPERATION OF PELTIER COOLER

Operating the device at 15 MHz pixel rate, with the heat extracted from the base of the package using a 1 °C/W heatsink to an ambient temperature of 30 °C, cooling the sensor to −10 °C will typically require a Peltier supply current of approximately 3 A and a potential of approximately 1 V.

THERMISTOR

The package includes a Fenwal thermistor for temperature sensing, part number 196-302LAD-002.

ESD HANDLING PROCEDURES

CCD sensors, in common with most high performance IC devices, are static sensitive. In certain cases a static electricity discharge may destroy or irreversibly degrade the device. Accordingly, full anti-static handling precautions should be taken whenever using a CCD sensor or module. These include:

- Working at a fully grounded workbench.
- Operator wearing a grounded wrist strap.
- All receiving socket pins to be positively grounded.
- Unattended CCDs should not be left out of their conducting foam or socket.

All devices are provided with internal protection circuits to most gate electrodes but not to the other pins.

Evidence of incorrect handling will terminate the warranty.

EXPOSURE TO RADIATION

Exposure to radiation may irreversibly damage the device and result in degradation of performance. Users wishing to operate the device in a radiation environment are advised to consult e2v technologies.

OPERATING CONDITIONS

Typical operating voltages are as given in the table below. Some adjustment within the minimum-maximum range specified may be required to optimise performance.

CONNECTION	PULSE AMPLITUDE OR DC LEVEL (V)		
	Min	**Typical**	**Max**
I∅1,2 high	+4 (see note 11)	+5	+7 (see note 11)
I∅1,2 low	-	−5	-
S∅1,2 high	+4 (see note 11)	+5	+7 (see note 11)
S∅1,2 low	-	−5	-
R∅1,2,3 high	+10	+12	+13
R∅1,2,3 low	-	0	-
R∅2HV high	+20	+40	+50 (see note 3)
R∅2HV low	0	+4	+5
∅R high	+10 (see note 12)	+12	+13 (see note 12)
∅R low	-	0	-
R∅DC	+2	+3	+5
OG	+1	+3	+5
SS	0	+4.5	+7
OD	+25	+28	+32
RD	+15	+18	+20
IG	-	−5	-
ABD	+20	+24	+27
DG low	-	0	-
DG high	+10	+12	+15

NOTES

11. I∅ and S∅ adjustment may be common.
12. ∅R high level may be adjusted in common with R∅1,2,3.
13. It is possible to dump unwanted lines of signal by employing the timing diagram in Fig. 10. DG high should be 2 V greater than R∅1,2,3 high. Charge is dumped from the standard register (see Fig. 11) into ABD.

An external load is required. This can either be a resistor of about 2.2 kΩ (non-critical) or a constant current type of about 7.5 mA. The total on-chip power dissipation at 500 Hz frame rate is approximately 200 - 250 mW, depending on the details of the voltages and clock timings used.

© e2v technologies

DRIVE PULSE WAVEFORM SPECIFICATION

The following are suggested pulse rise and fall times for operation at 500 Hz frame rate, and with pixel readout at 11 MHz.

CLOCK PULSE	TYPICAL RISE TIME (ns)	TYPICAL FALL TIME (ns)	TYPICAL PULSE OVERLAP
IØ	20	20	@90% points
SØ	20	20	@90% points
RØ1	5	5	@70% points
RØ2	5	5	@70% points
RØ3	5	5	@70% points
RØ2HV	25	25	see note 15
RØ2HV	Sine	Sine	Sinusoid- high on falling edge of RØ1

NOTES

14. Register clock pulses are as shown in Figs. 4 and 5.
15. An example clocking scheme is shown in Fig. 5. RØ2HV can also be operated with a normal clock pulse, as shown in Fig. 4. The requirement for successful clocking is that RØ2HV reaches its maximum amplitude before RØ1 goes low.

ELECTRICAL INTERFACE CHARACTERISTICS

ELECTRODE CAPACITANCES AT MID CLOCK LEVELS				
Connection	**Capacitance to SS**	**Inter-phase Capacitances**	**Total Capacitance**	**Units**
IØ1 (see note 16)	750	100	850	pF
IØ2 (see note 16)	750	100	850	pF
SØ1 (see note 16)	750	100	850	pF
SØ2 (see note 16)	750	100	850	pF
RØ1	36	41	77	pF
RØ2	56	41	97	pF
RØ3	62	60	122	pF
RØ2HV	45	49	94	pF
SERIES RESISTANCES				
Connection	**Approximate Total Series Resistance**			
IØ1	9			Ω
IØ2	9			Ω
SØ1	9			Ω
SØ2	9			Ω
RØ1	7			Ω
RØ2	7			Ω
RØ3	7			Ω
RØ2HV	8			Ω
AMPLIFIER				
Output Impedance	250			Ω

NOTE

16. For operation in the inverted mode. For operation in the non-inverted mode, the capacitance to substrate is 400 pF and the total capacitance is 500 pF.

Figure 4: CLOCKING SCHEME FOR MULTIPLICATION GAIN (Normal clock pulses)

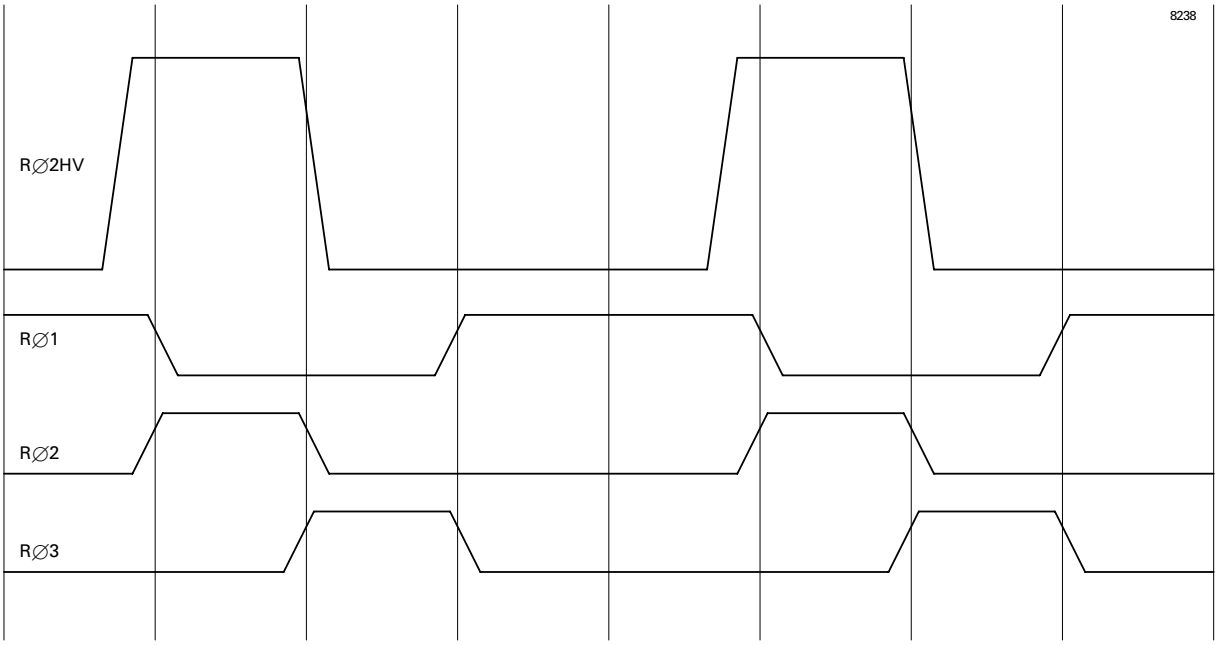

Figure 5: CLOCKING SCHEME FOR MULTIPLICATION GAIN (Sine wave clocks)

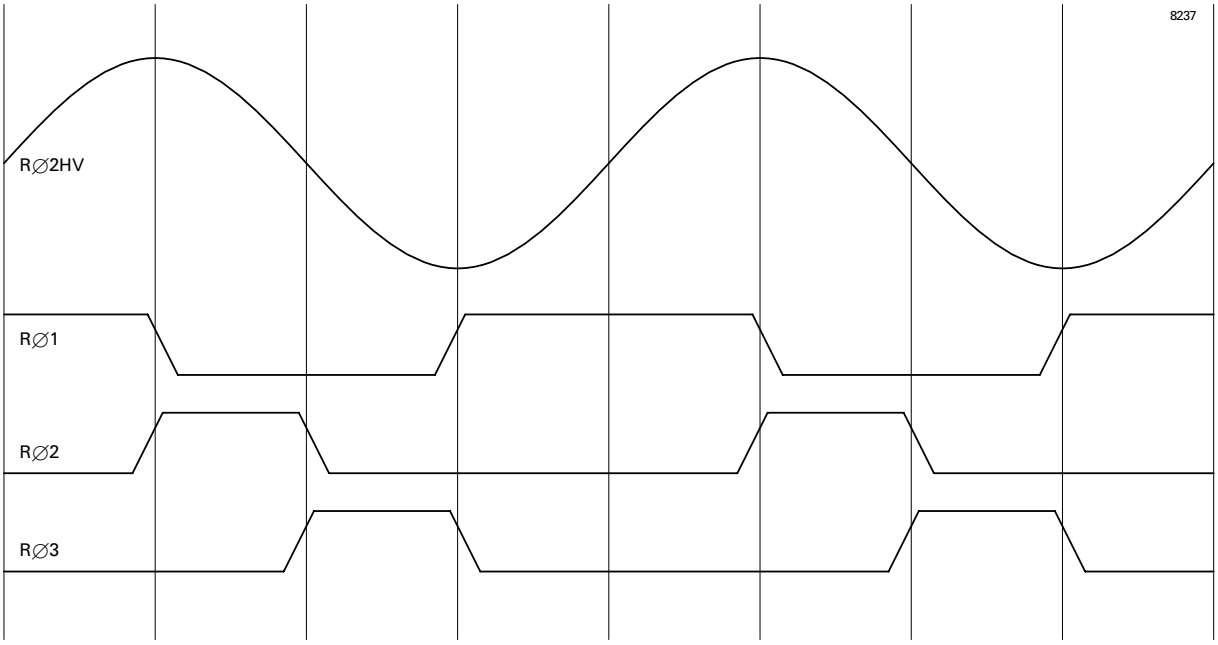

© e2v technologies

PULSE TIMINGS AND OVERLAPS

Figure 6: RESET PULSE

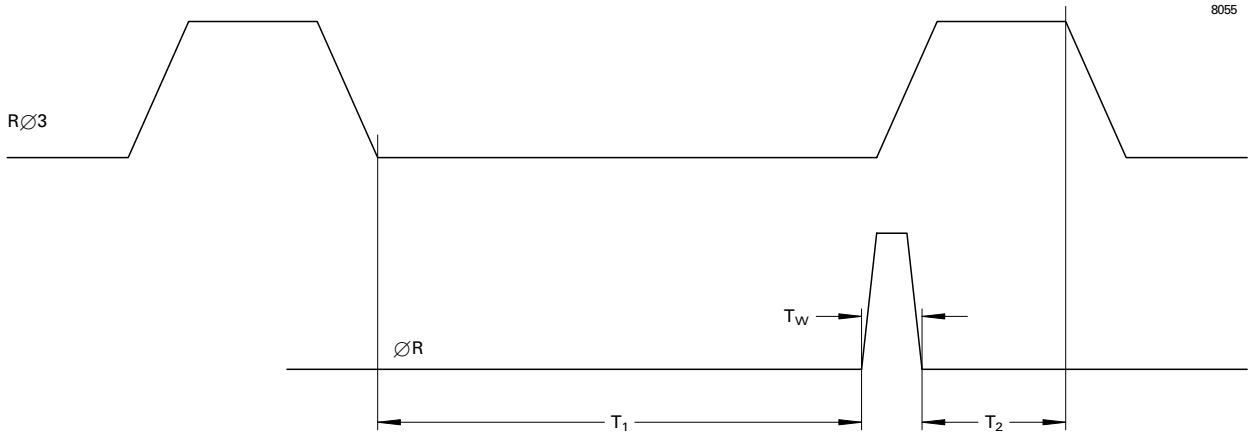

T_W = 10 ns typical
T_1 = output valid
T_2 > 0 ns

Figure 7: PULSE AND OUTPUT TIMING

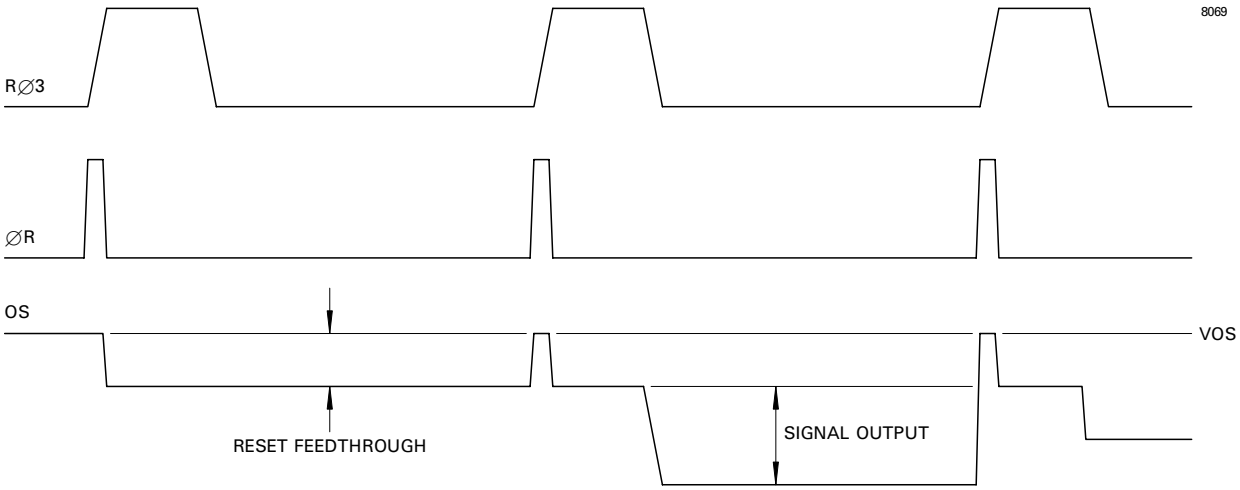

Figure 8: EXAMPLE LINE TIMING DIAGRAM

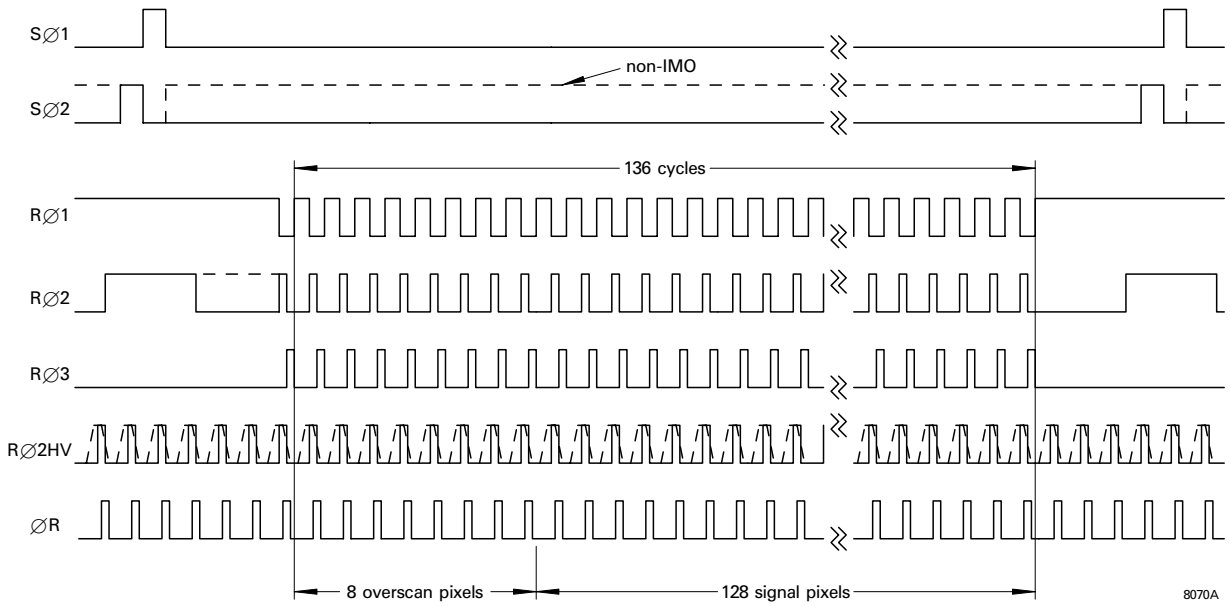

Figure 9: EXAMPLE FRAME TIMING DIAGRAM

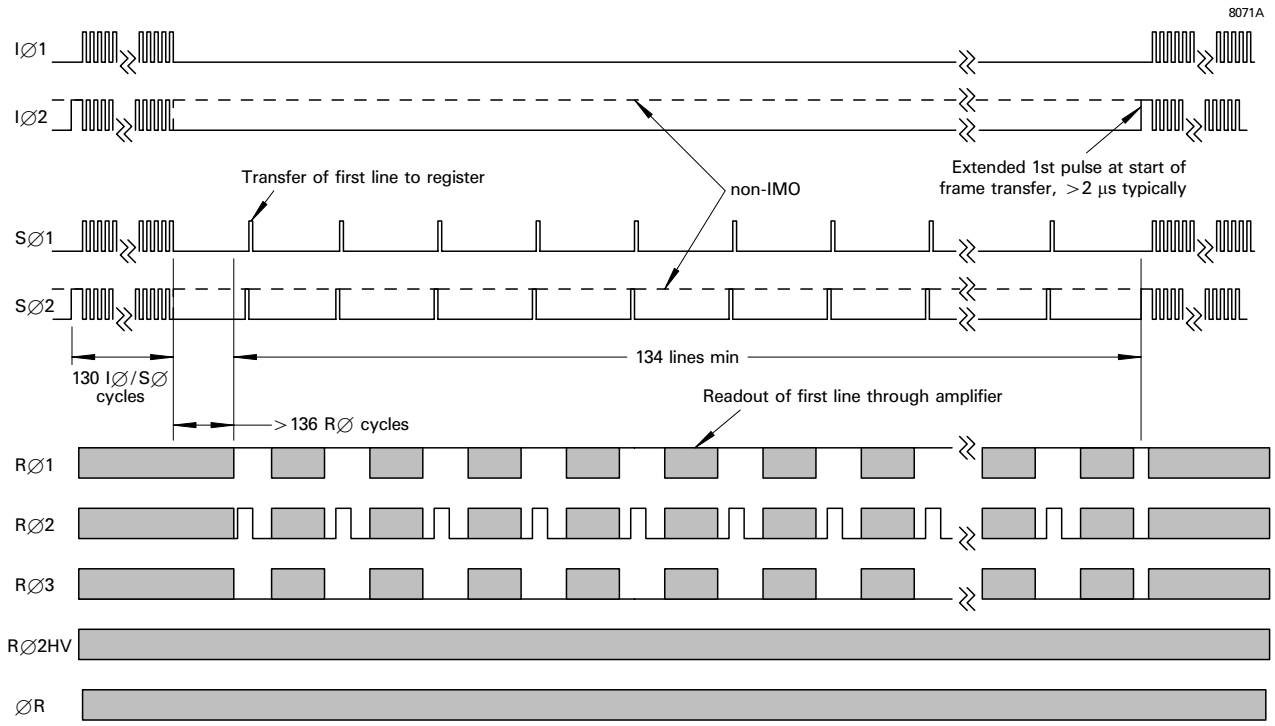

© e2v technologies

Figure 10: OPERATION OF THE DUMP GATE TO DUMP n LINES OF UNWANTED DATA FROM THE STANDARD REGISTER

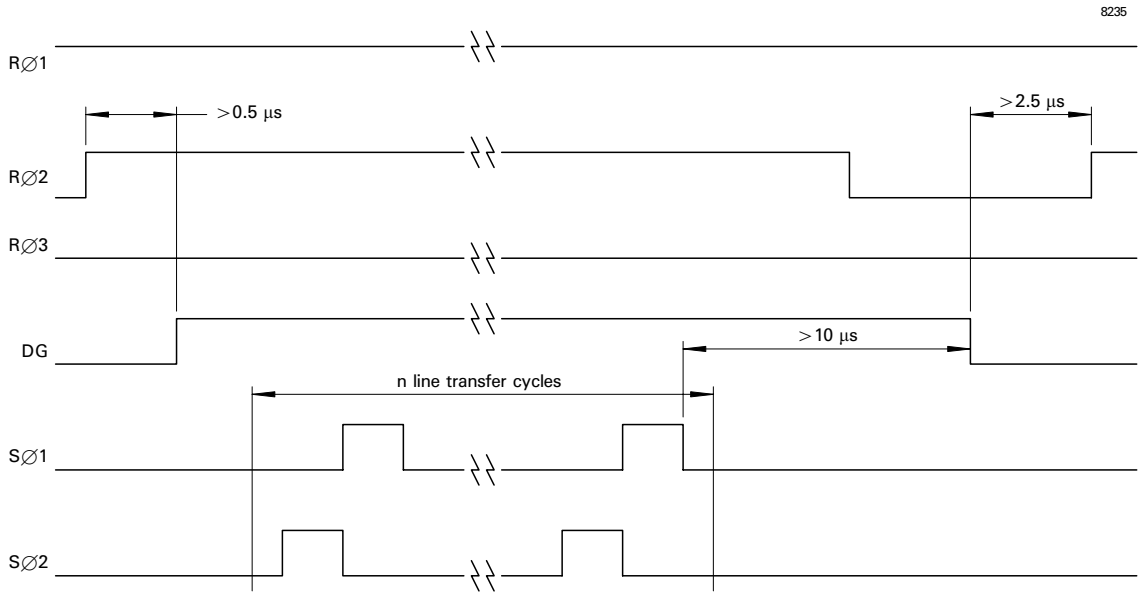

Figure 11: SCHEMATIC CHIP DIAGRAM

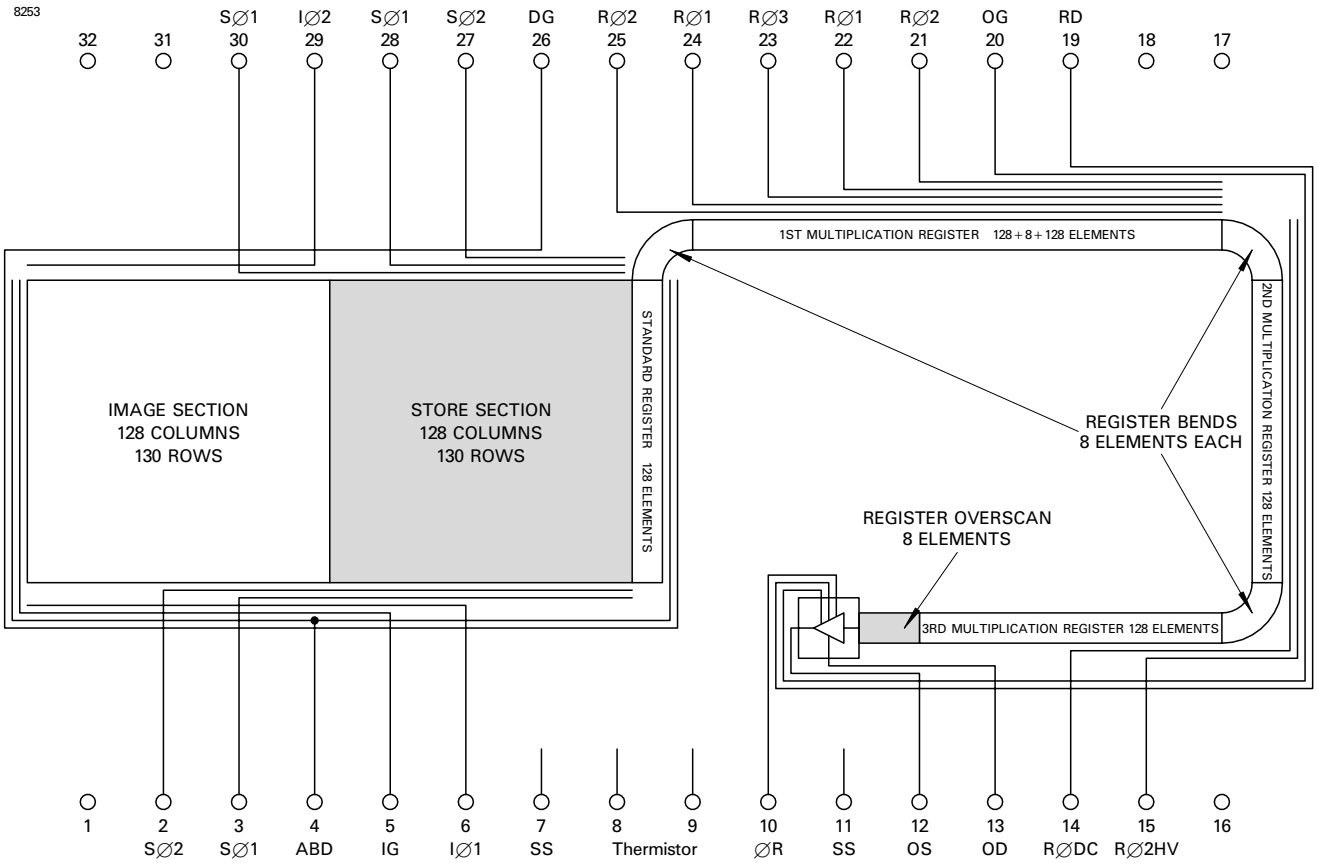

Figure 12: LINE OUTPUT FORMAT

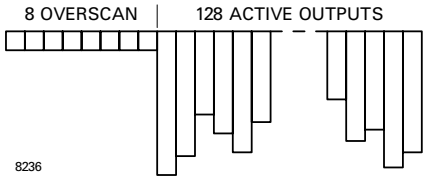

NOTE

17. There is a 4-line propagation delay between transferring a line from the store section to the standard register and reading it out through the output amplifier.

Figure 13: OUTPUT CIRCUIT SCHEMATIC

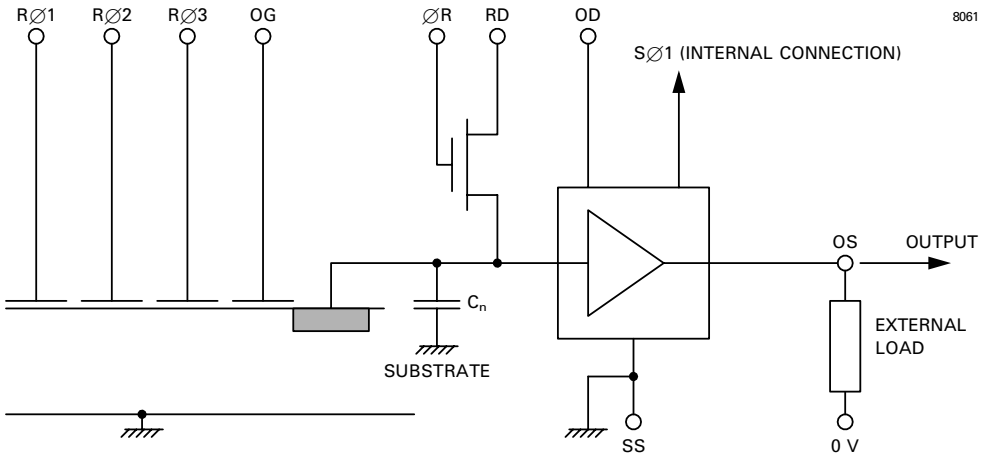

© e2v technologies

Figure 14: PACKAGE OUTLINE
(All dimensions without limits are nominal)

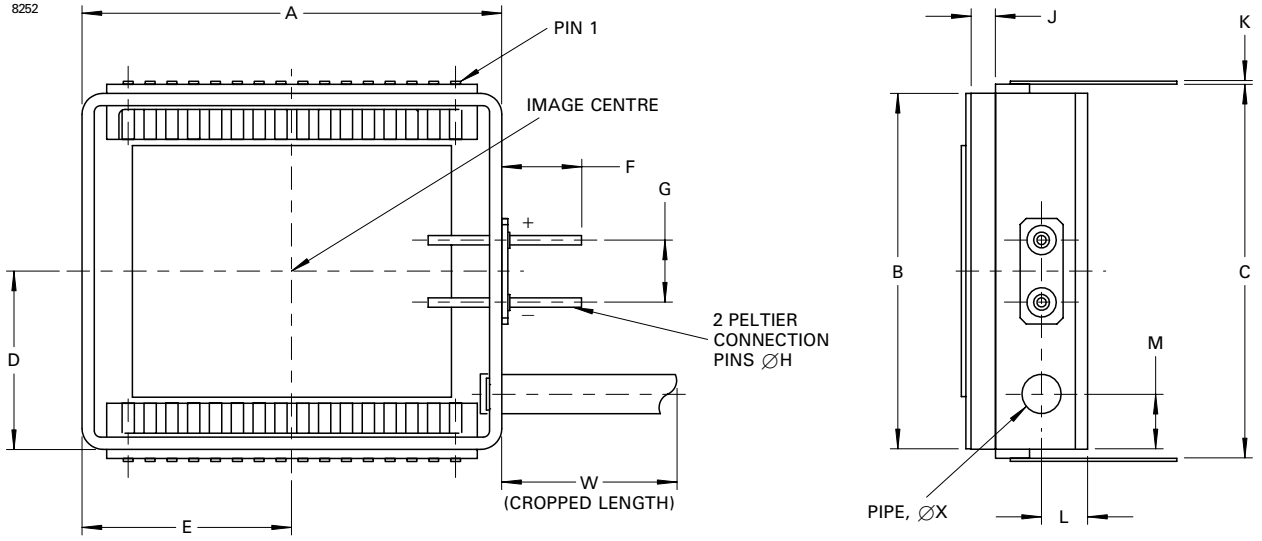

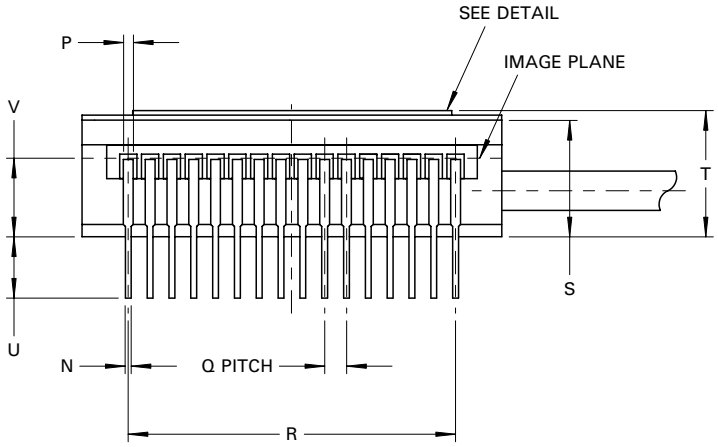

Ref	Millimetres
A	34.2 ± 0.2
B	29.0 ± 0.2
C	30.48 ± 0.50
D	14.5 ± 0.5
E	17.1 ± 0.5
F	6.5 ± 0.5
G	5.08 ± 0.15
H	0.76 ± 0.10
J	2.0 ± 0.2
K	0.25 ± 0.05
L	3.75 ± 0.25
M	4.5 ± 0.2
N	0.475 ± 0.075
P	0.8 ± 0.1
Q	1.778 ± 0.130
R	26.67
S	9.5 ± 0.2
T	9.9 ± 0.4
U	4.5 min
V	6.5 ± 0.4
W	13.0 max
X	3.200 ± 0.075
AA	0.9 ± 0.1
AB	0.10 ± 0.10
AC	0.25 ± 0.03
AD	1.25 ± 0.03

Detail of Window Bonding

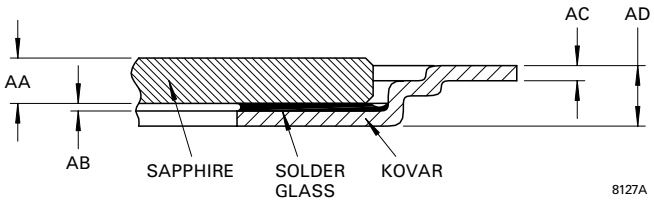

Outline Notes

1. Package material Fe-Ni-Co alloy.
2. The device image area is parallel to the package back surface to within 100 μm typically.
3. The sapphire window is AR coated to give a total transmission that is typically >97% between 450 and 1000 nm.

Whilst e2v technologies has taken care to ensure the accuracy of the information contained herein it accepts no responsibility for the consequences of any use thereof and also reserves the right to change the specification of goods without notice. e2v technologies accepts no liability beyond that set out in its standard conditions of sale in respect of infringement of third party patents arising from the use of tubes or other devices in accordance with information contained herein.